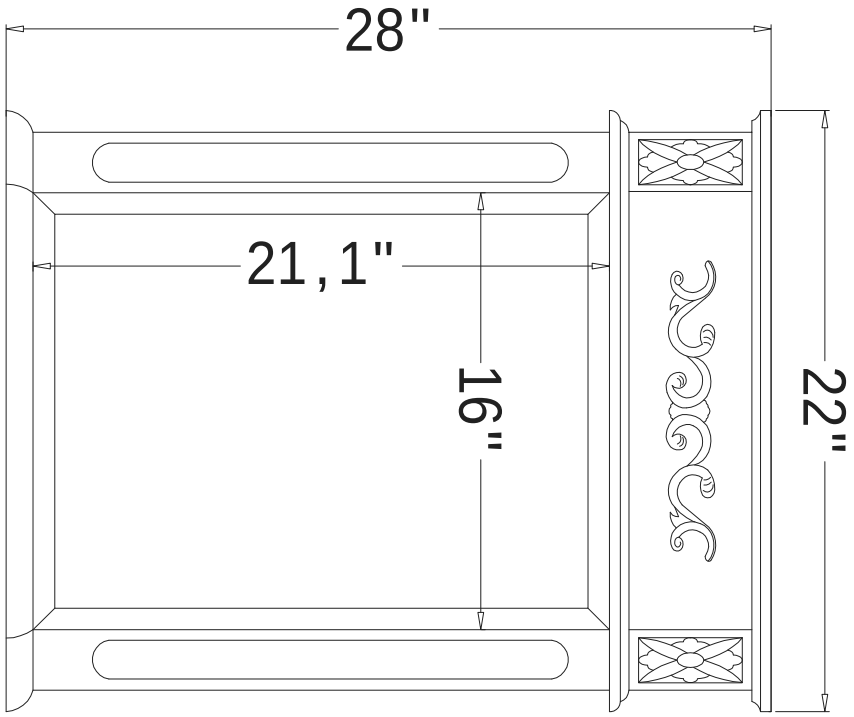

VM-1003